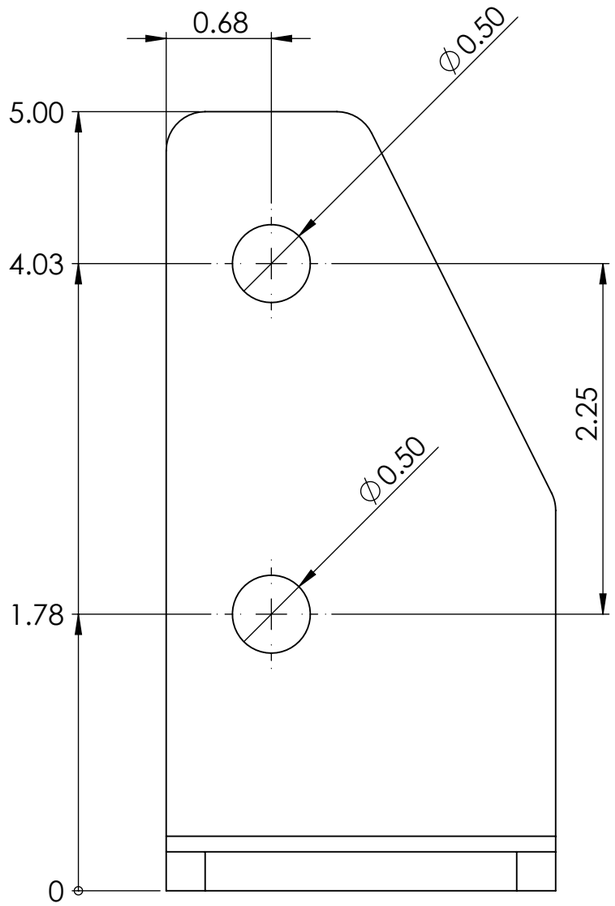

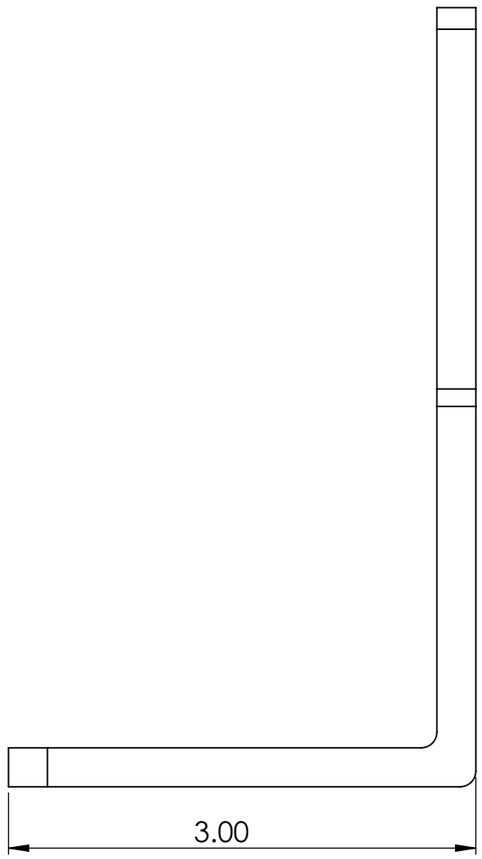

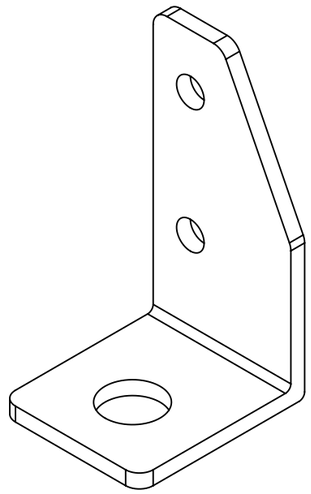

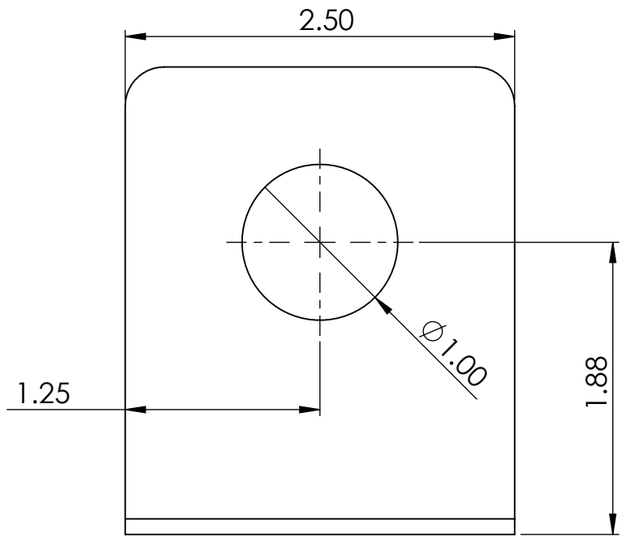

UNLESS OTHERWISE SPECIFIED: DIMENSIONS ARE IN INCHES SURFACE FINISH: RAW TOLERANCES: +/- 0.01		FINISH: RAW				DEBUR AND BREAK SHARP EDGES
	NAME	SIGNATURE	DATE			
DRAWN	MILES		2016			
CHK'D						
APPV'D						
MFG						
Q.A				MATERIAL: STEEL		
				WEIGHT:		

DO NOT SCALE DRAWING	REVISION
FORD 8.8 IRS	
TITLE: REAR RIGHT MOUNT	
DWG NO. 1	A3
SCALE:1:2	SHEET 1 OF 1