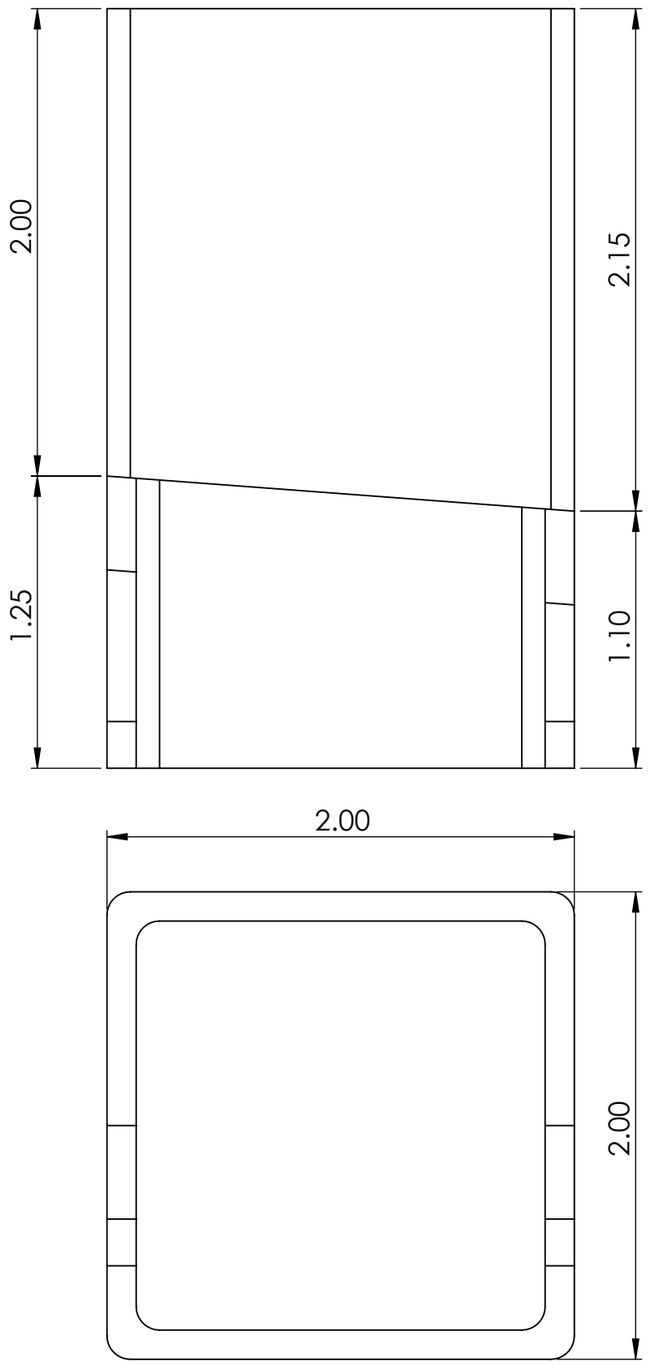

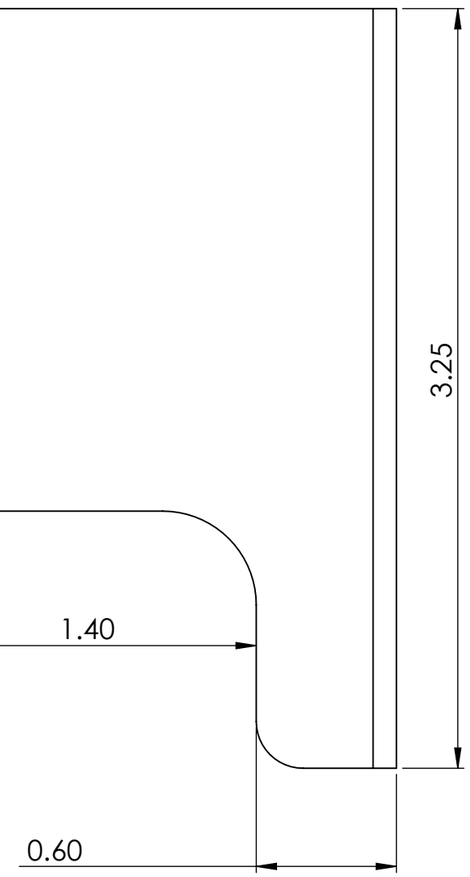

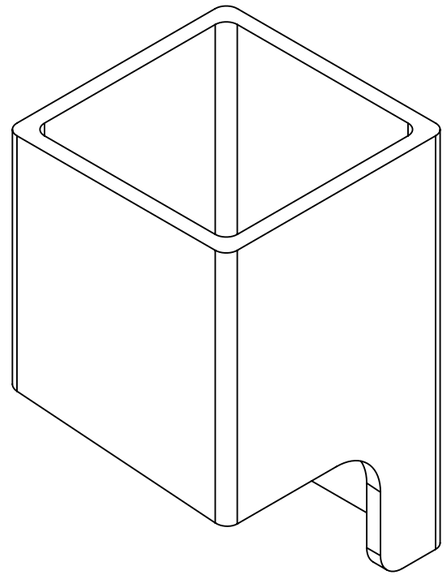

UNLESS OTHERWISE SPECIFIED: DIMENSIONS ARE IN INCHES SURFACE FINISH: RAW TOLERANCES: +/- 0.01	FINISH: RAW				DEBUR AND BREAK SHARP EDGES	DO NOT SCALE DRAWING / REVISION
						FORD 8.8 IRS
	NAME	SIGNATURE	DATE			TITLE:
DRAWN	MILES					RIGHT FRONT MOUNT
CHK'D						
APPV'D						
MFG						
Q.A				MATERIAL: 2X2 SQUARE STEEL TUBE		DWG NO. 1 / A3
				WEIGHT:		SCALE:1:1 / SHEET 1 OF 1